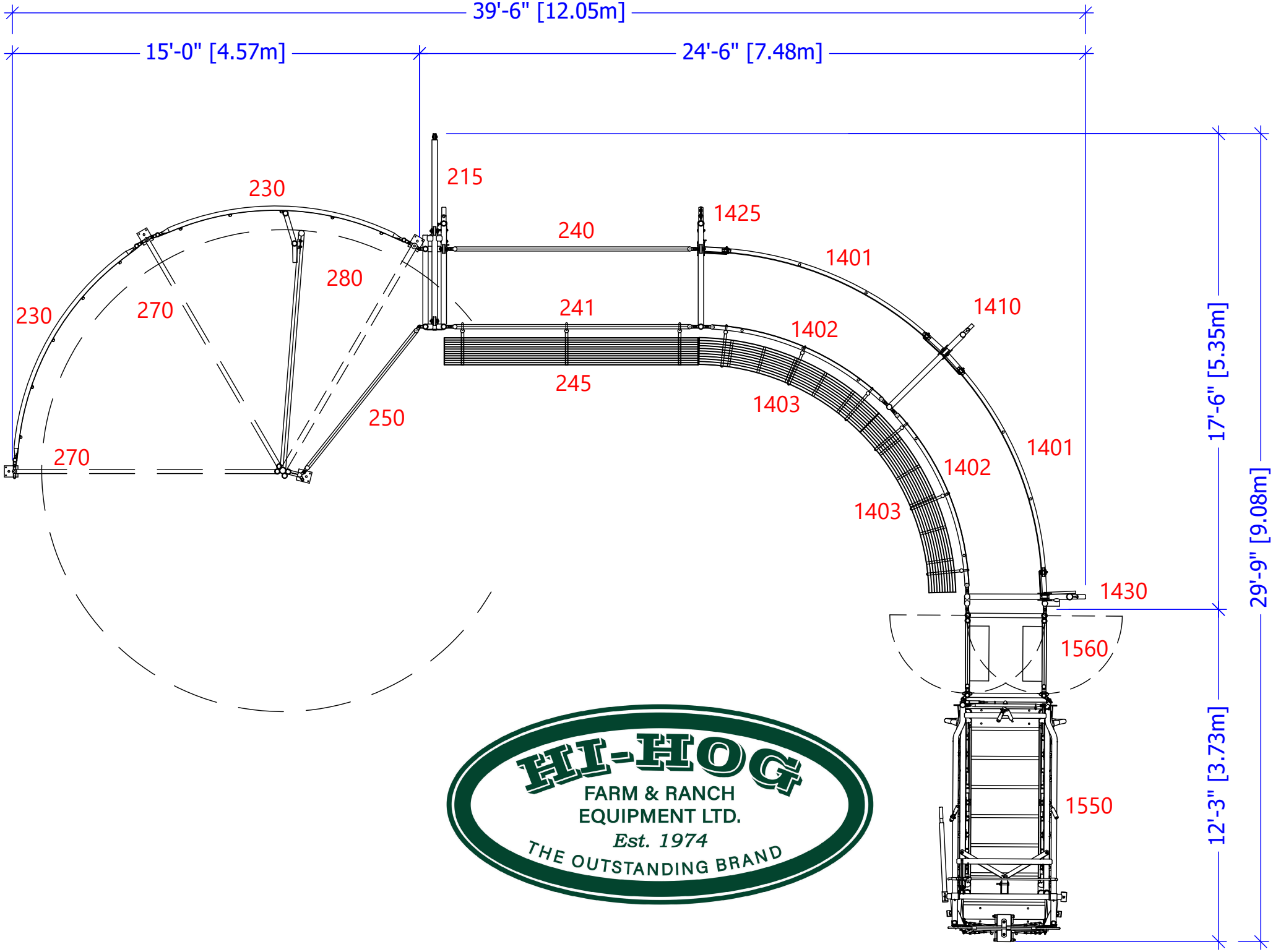

HI-HOG
FARM & RANCH
EQUIPMENT LTD.
Est. 1974
THE OUTSTANDING BRAND