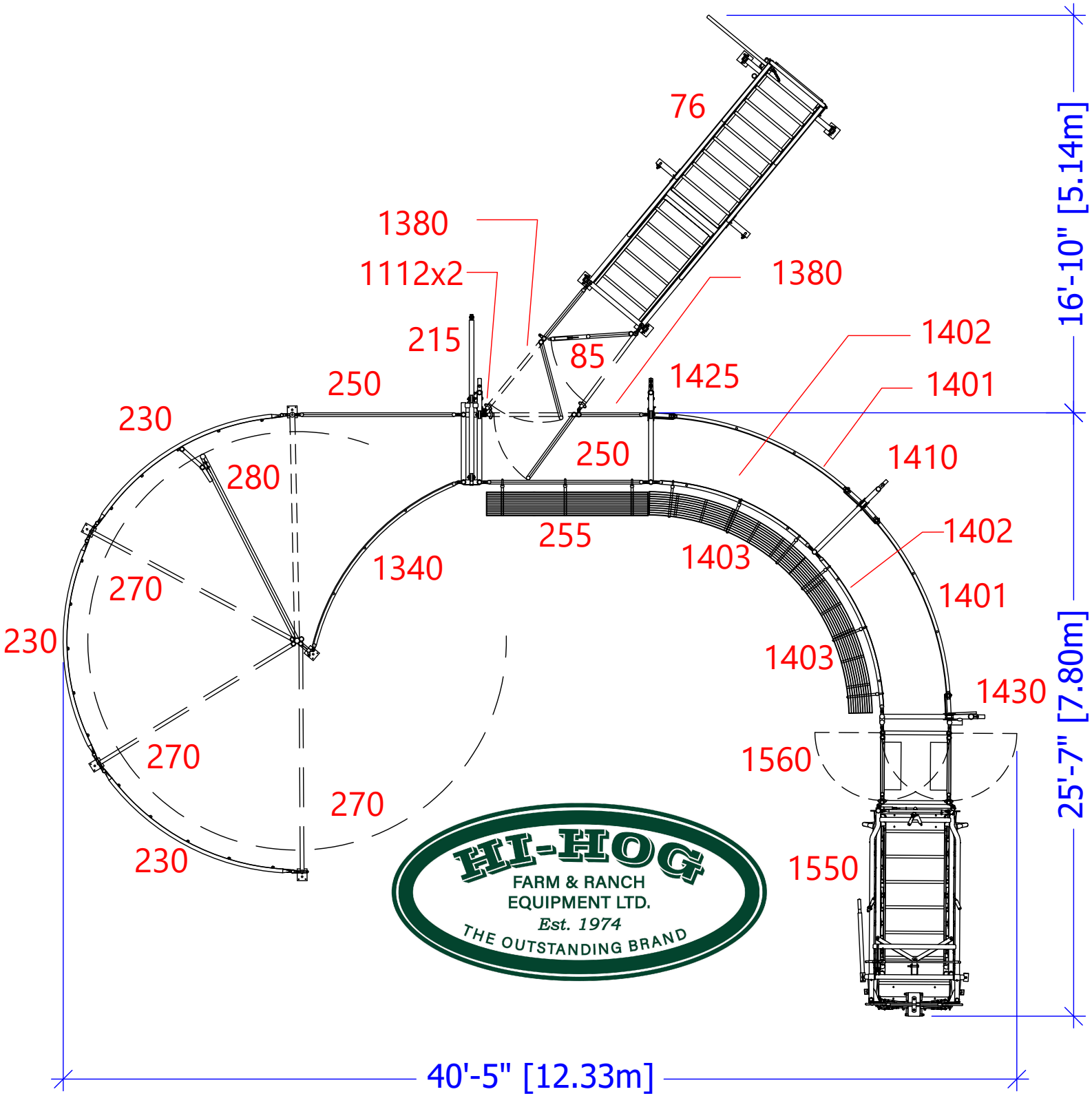
76
1380
1112x2
1380
215
85
1402
250
1425
1401
230
250
1410
280
255
1402
1340
1403
270
1401
230
1403
1430
1560
270
270
230
1550
16'-10" [5.14m]
25'-7" [7.80m]
40'-5" [12.33m]
HI-HOG
FARM & RANCH
EQUIPMENT LTD.
Est. 1974
THE OUTSTANDING BRAND