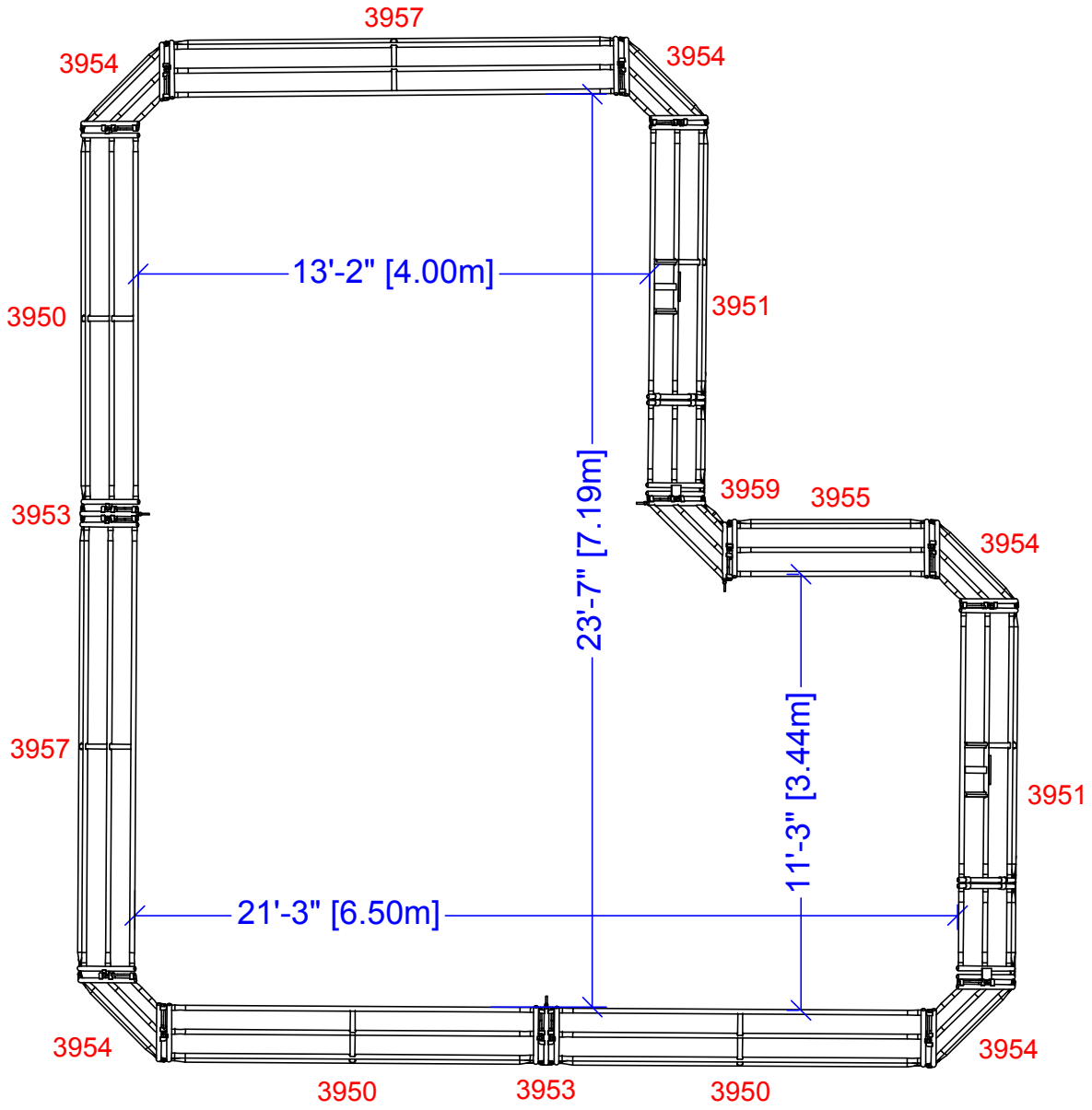

Hi-Hog Equipment

1-800-661-7002

Complex - One inside corner

Wellhead - One Inside Corner			
Count	ITEM#	DESCRIPTION	WEIGHT
3	3950	Well Fence - 10' Panel	48 lbs
2	3951	Well Fence - 10' Panel - with Gate	66.5 lbs
2	3953	Well Fence - Connector	17 lbs
5	3954	Well Fence - 2' Panel - Outside Corner	24 lbs
1	3955	Well Fence - 5' Panel	25 lbs
2	3957	Well Fence - 12' Panel	56 lbs
1	3959	Well Fence - 2' Inside Corner	35 lbs